PANOTO

Industrial Cooling Solutions

ENGINE MOUNTED GENSET RADIATOR / FAN ON RADIATOR

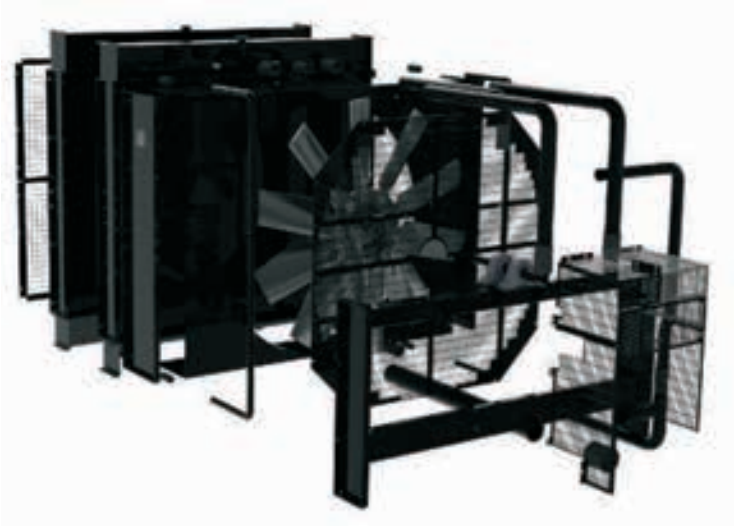

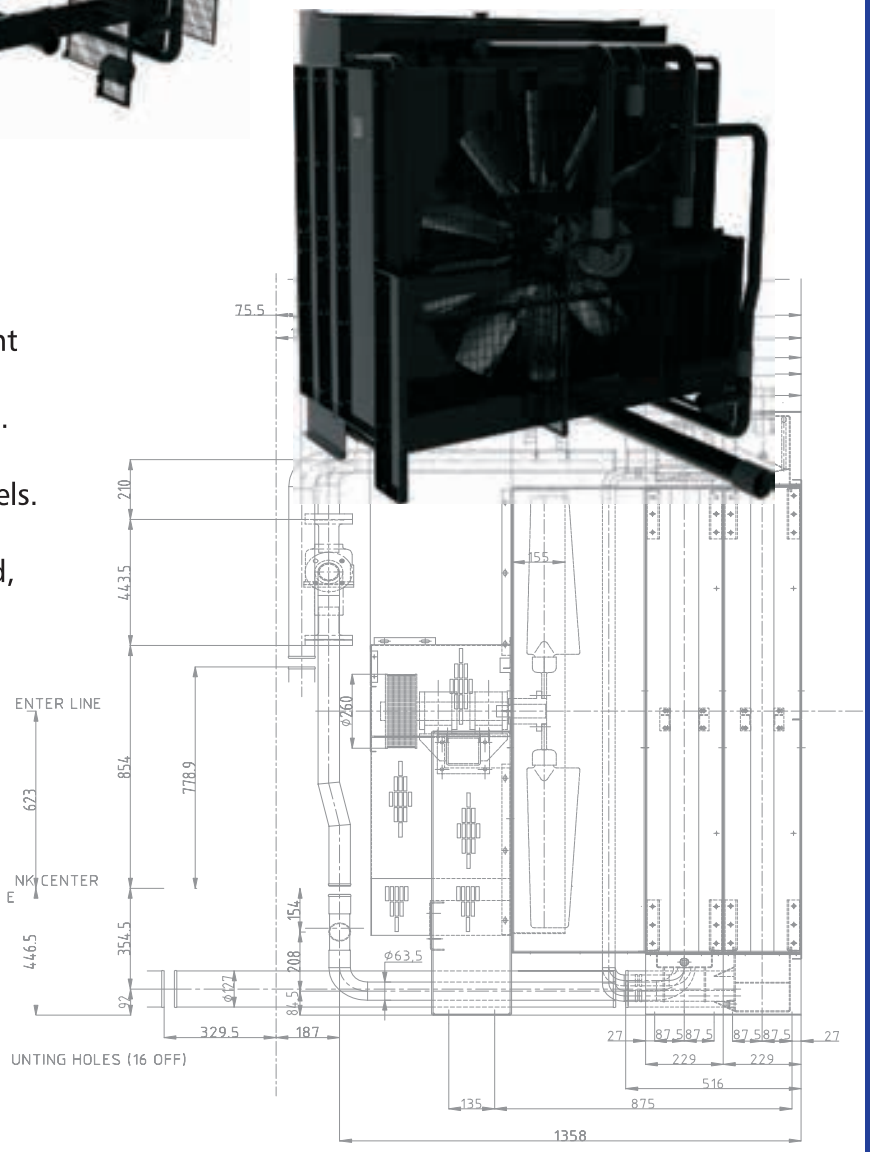

PANOTO designs and produces complete radiators for many different engines on both prime and emergency gensets and UPS systems. This type of coolers can give high ambient capacity and low sound levels. Heavy duty bearings support the fan drive & shaft and,where required, a belt tension mechanism is fitted.

Our scope of supply covers:

*Cores and expansion tanks
*Pipes, Flanges, Clamps, Hoses
*Fan
*Bearings
*Pulley, Belt, Belt tension mechanism (optional)
*Protective Guards
*Colour options

COMMUNICATION

www.panoto.com.tr

PANOTO HEAD OFFICE

Bakır ve Pirinç Sanayicileri Sitesi,
Mustafa Kurtoğlu Cad.No.18
B.Çekmece / İSTANBUL / TÜRKİYE
Tel : + 90 212 875 09 90 (4 Lines)
Fax : + 90 212 875 32 23

E-mail:
info@panoto.com.tr
exim4@panoto.com.tr